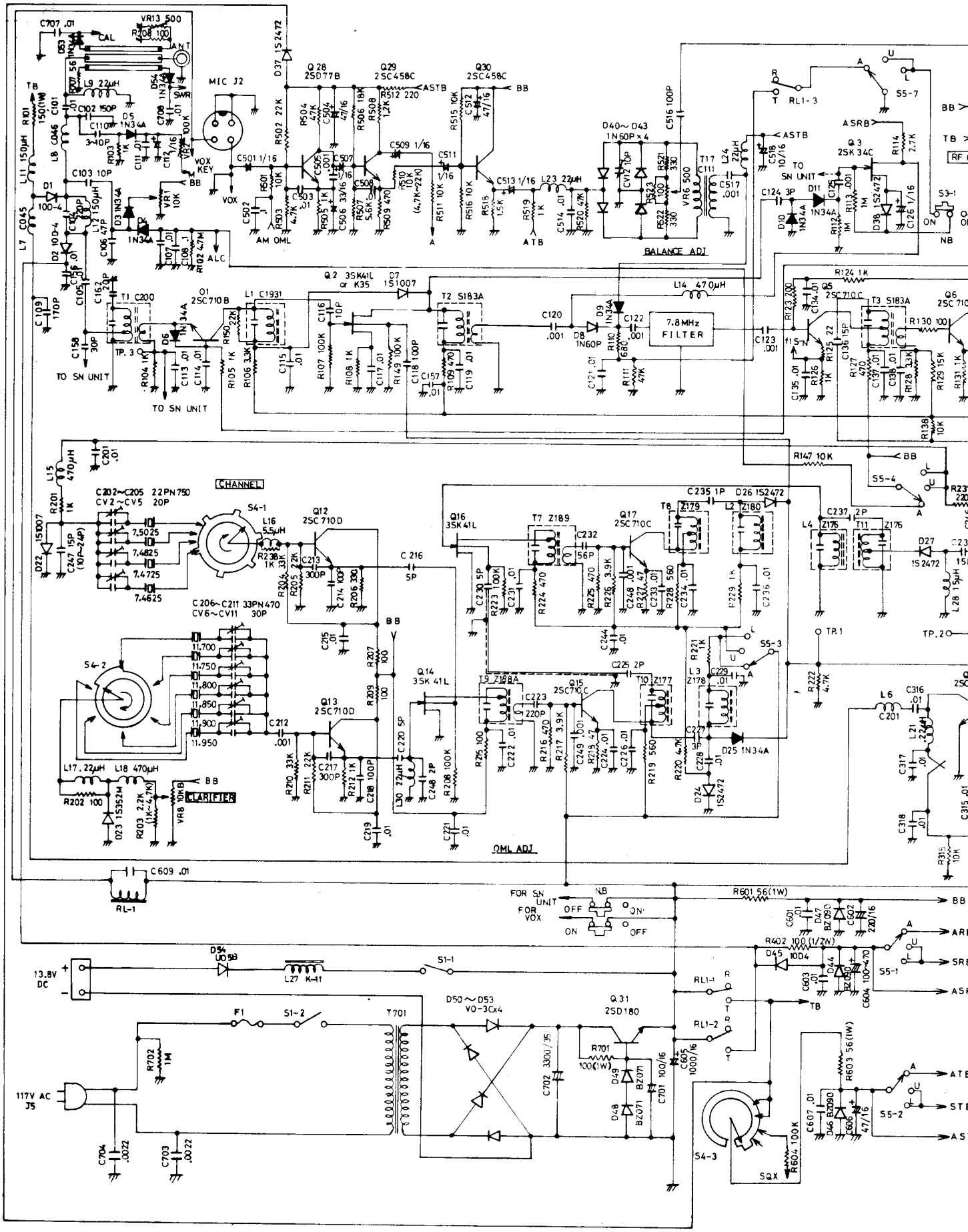

Downloaded by
RadioAmateur.EU

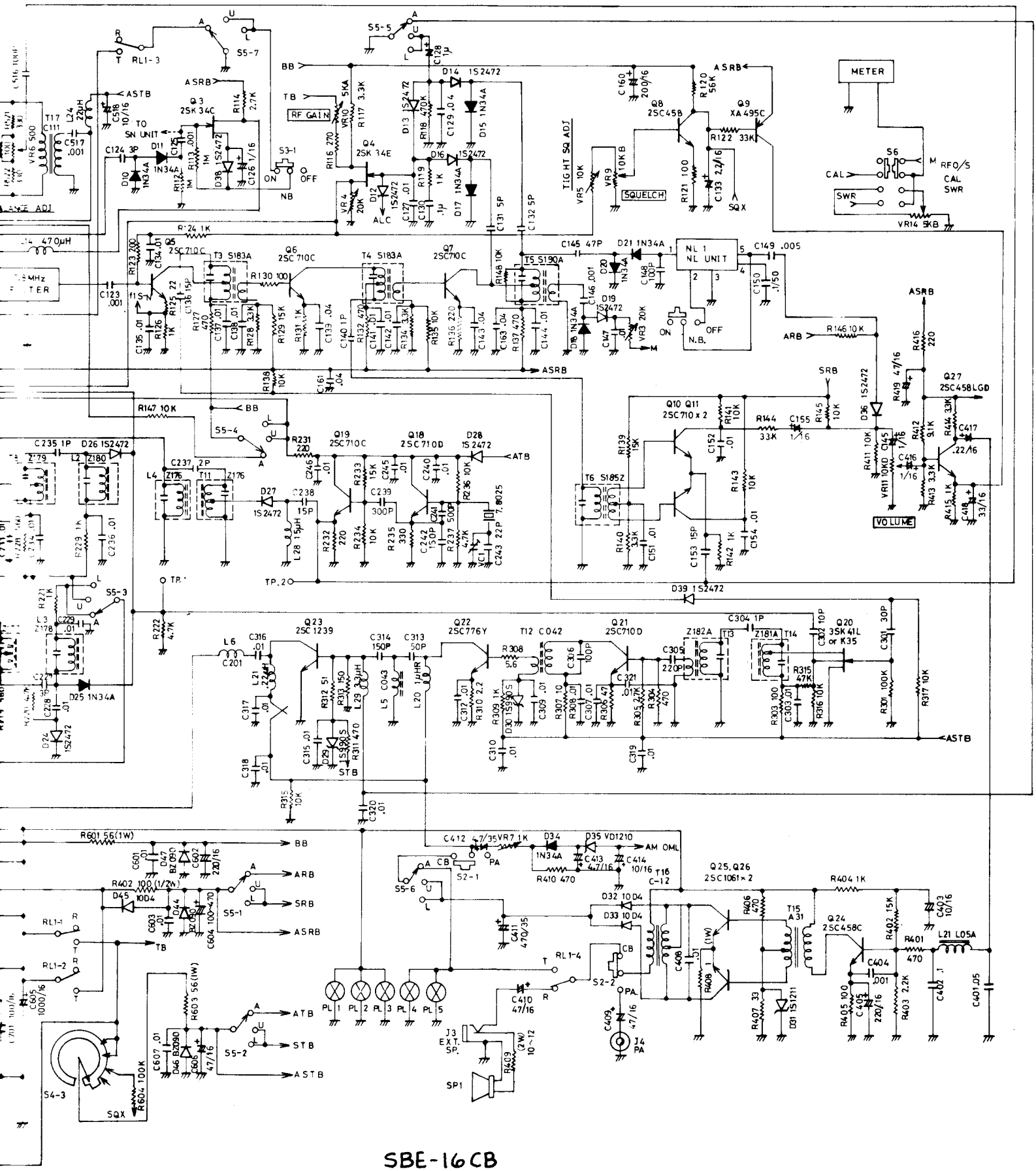
METER
RF GAIN
SQUELCH
TIGHT SQ ADJ
NL 1
NL UNIT
N.B.
VOLUME
SWR
CAL
RFO/S
TO SN UNIT
ASTB
ASRB
ARB
SRB
BB
TB
ATB
STB
ALC
SQX
PA
AM OML
Q3 2SK 34C
Q4 2SK 34E
Q5 2SC710C
Q6 2SC710C
Q7 2SC710C
Q8 2SC458
Q9 XA495C
Q10 Q11 2SC710 x 2
Q18 2SC710D
Q19 2SC710C
Q20 3SK41L or K35
Q21 2SC710D
Q22 2SC776Y
Q23 2SC1239
Q24 2SC458C
Q25, Q26 2SC1061 x 2
Q27 2SC458LGD
T3 S183A
T4 S183A
T5 S190A
T6 S185Z
T12 C042
T15 A31
T16 C-12
J3 EXT. SP.
J4 PA
SP1
S4-3
S5-1
S5-2
S5-3
S5-4
S5-5
S5-6
S5-7
S6
S2-1
S2-2
S3-1
RL1-1
RL1-2
RL1-3
RL1-4
PL 1
PL 2
PL 3
PL 4
PL 5

SBE-16CB

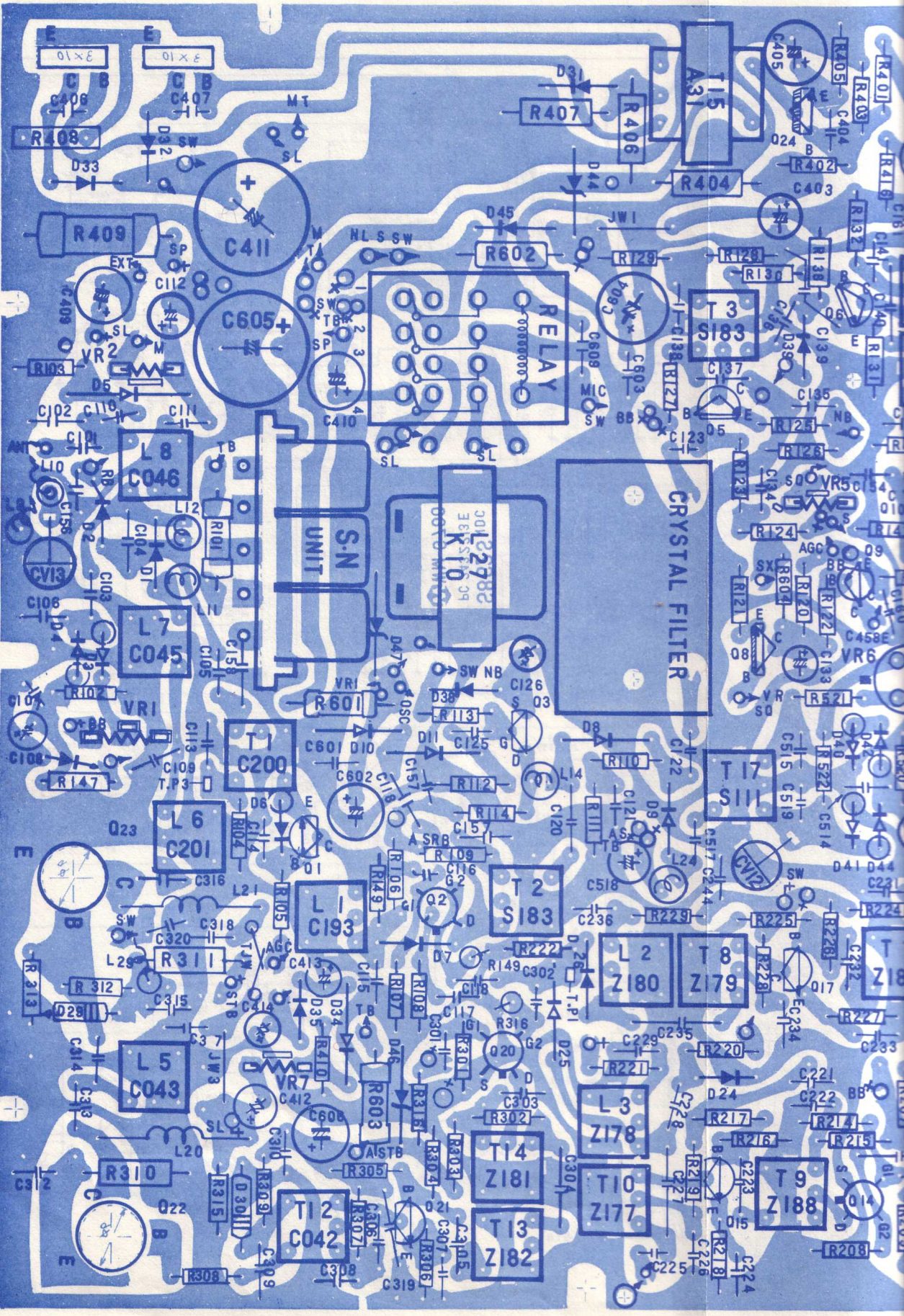
RELAY
CRYSTAL FILTER
S-N UNIT
L 8 C046
L 7 C045
T1 C200
L 6 C201
L 1 C193
L 5 C043
T12 C042
T 2 S183
T 3 S183
T 5 A3
T 17 S111
L 2 Z180
T 8 Z179
L 3 Z178
T10 Z177
T14 Z181
T13 Z182
T 9 Z188
C411
C605
R409
R408
R407
R406
R404
R602
R601
R603
R310
R311
R147
R521
VR2
VR1
VR5
VR6
VR7
CV13
CV12

SBE-16CB

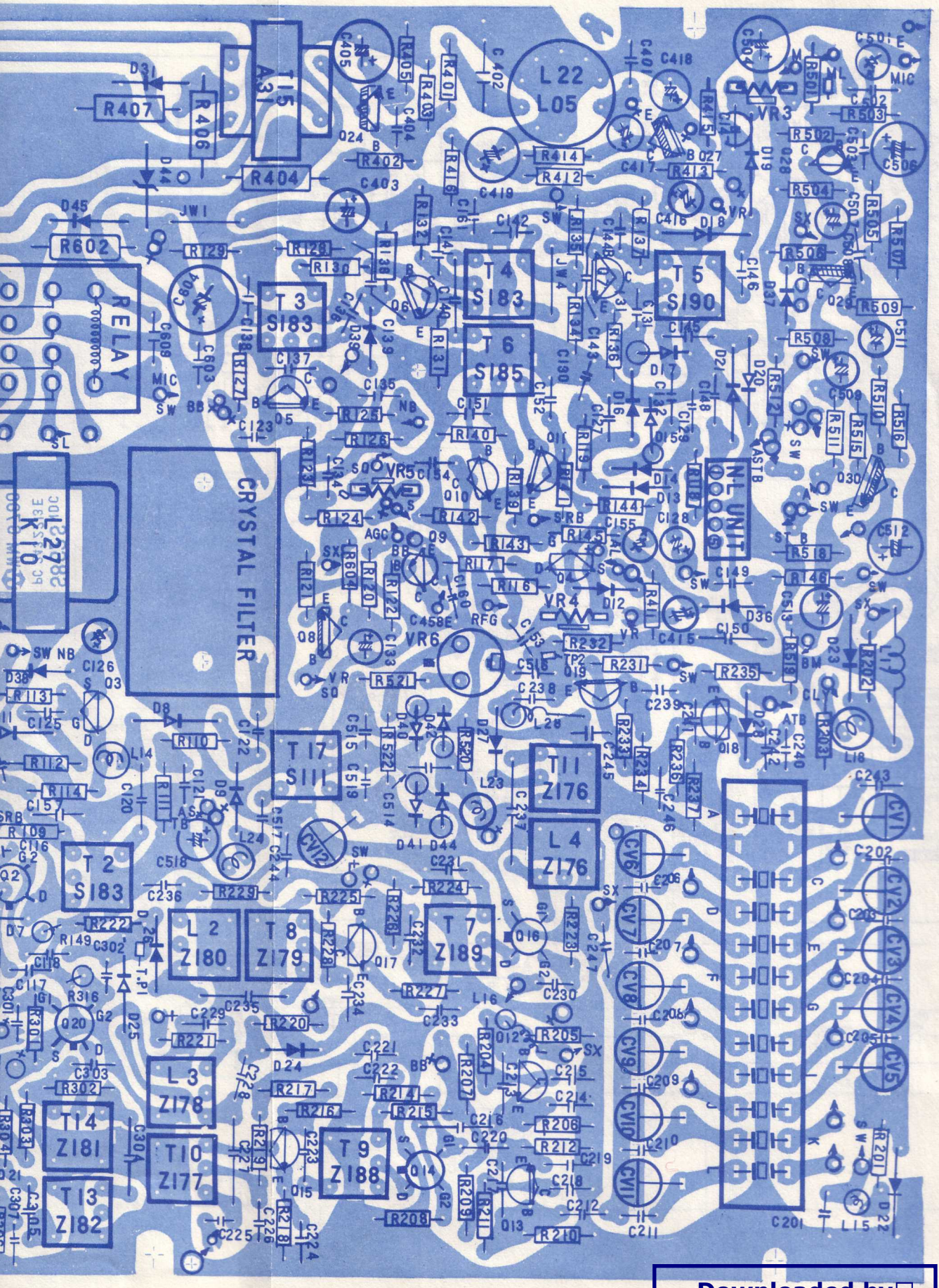

SBE-16CB

Downloaded by
RadioAmateur.EU